HUXWRX
SAFETY CO.

FLOW 45 *M*

PRODUCT MANUAL



TABLE OF CONTENTS

1. INTRODUCTION
2. WARNINGS & DEFINITIONS
3. PRODUCT OVERVIEW
4. SUPPORTED ACCESSORIES
5. SUPPRESSOR INSTALLATION & REMOVAL
6. ACCESSORY INSTALLATION & REMOVAL
7. RECOMMENDED CLEANING CYCLE

INTRODUCTION

MISSION STATEMENT:

Human eXposure WORKShop (HUXWRX) Safety Co. is an industry-leading center of excellence dedicated to de-risking high velocity events. Through innovative solutions and ingenuity, this development lab protects professionals and enthusiasts by elevating the way they train, operate, and shoot.

QUALITY STATEMENT:

Every HUXWRX product is engineered, manufactured, and tested in the United States to meet the highest standards of safety, reliability, and performance. Each unit is built using advanced materials and additive manufacturing processes, then inspected to ensure it performs as intended.

CUSTOMER SERVICE AND CARE STATEMENT:

For product questions or support assistance, please contact HUXWRX Support at support@huxwrx.com

WARNINGS & DEFINITIONS

⚠ WARNING

Firearm may be loaded.

Could result in death or serious injury.

Ensure the firearm is unloaded.

⚠ WARNING

Incorrect caliber of ammunition for suppressor may fit into firearm.

Could result in death, serious injury, or damage to the suppressor.

Ensure correct caliber of ammunition for suppressor is being used.

⚠ WARNING

Incorrect or modified components.

Could result in death, serious injury, or damage to the suppressor.

Do not modify components.

⚠ WARNING

Suppressor may not be aligned to bore.

Could result in death, serious injury, or damage to the suppressor.

Utilize an alignment rod to ensure bore alignment with the suppressor.

⚠ WARNING

Potential lead exposure.

Could cause death or serious injury.

Wear protective gloves, eye protection, and respiratory protection. Ensure adequate ventilation. Wash hands thoroughly after exposure.

⚠ CAUTION

Suppressor may be hot after use.

Could result in moderate injury or serious burns.

Allow the suppressor to cool and wear protective gloves.

NOTICE

Suppressors (often referred to as silencers, cans, or mufflers) are controlled under both the National Firearms Act (NFA) (26 U.S.C. §5849 et seq.) and the Gun Control Act (18 U.S.C. §921et seq.).Storing an unlocked sound suppressor at home with a person who is not registered to possess the device may be construed as "constructive possession" by the ATF, which may be punishable by law. It is your responsibility to check your local state and federal laws for ownership, hunting, transferring and transporting laws regarding silencers.

TERMS AND DEFINITIONS:

HUXWRX FLOW-THROUGH® Technology

An advanced suppressor design that channels gases directly through the device in a controlled manner to reduce recoil, minimize muzzle flash, maintain consistent performance, and protect shooter health.

Stiction

A muzzle device system that utilizes static friction taper and left-hand thread.

ft-lb / in-lb

Torque is the measure of the force that can cause an object to rotate about an axis.

PRODUCT OVERVIEW:

PRODUCT STATEMENT:

Welcome to the FLOW 45 M where performance meets modularity. Built from grade 23 titanium, this modular suppressor features innovative FLOW-Through Technology®. Extremely lightweight and remarkably durable, the FLOW 45 M offers the ideal balance of performance, reliability, and modularity, giving you the flexibility to tailor your suppressor to your exact needs.

AMMUNITION CONSIDERATIONS:

Ammunition selection can have a large impact on the performance of your HUXWRX suppressor. Select quality, factory-new ammunition when shooting with your suppressed firearm.

Suppressor performance may vary based on ammunition selection, weapon platform, and environmental conditions.

WHAT'S IN THE BOX?

1. FLOW 45 M ——— PN: 3796 (Black) 3800 (FDE)
   1a. FLOW 45 M Module
2. Booster piston ——— PN: 1822
3. Booster spring ——— PN: 1794
4. Piston Adapter ——— PN: 1778
5. Piston O-ring ——— PN: 1795
6. Module Adapter — PN: 3799 (Black) 3803 (FDE)
   Thread Protector
7. Module O-ring ——— PN: 3772
8. Pistol Wrench ——— PN: 1835

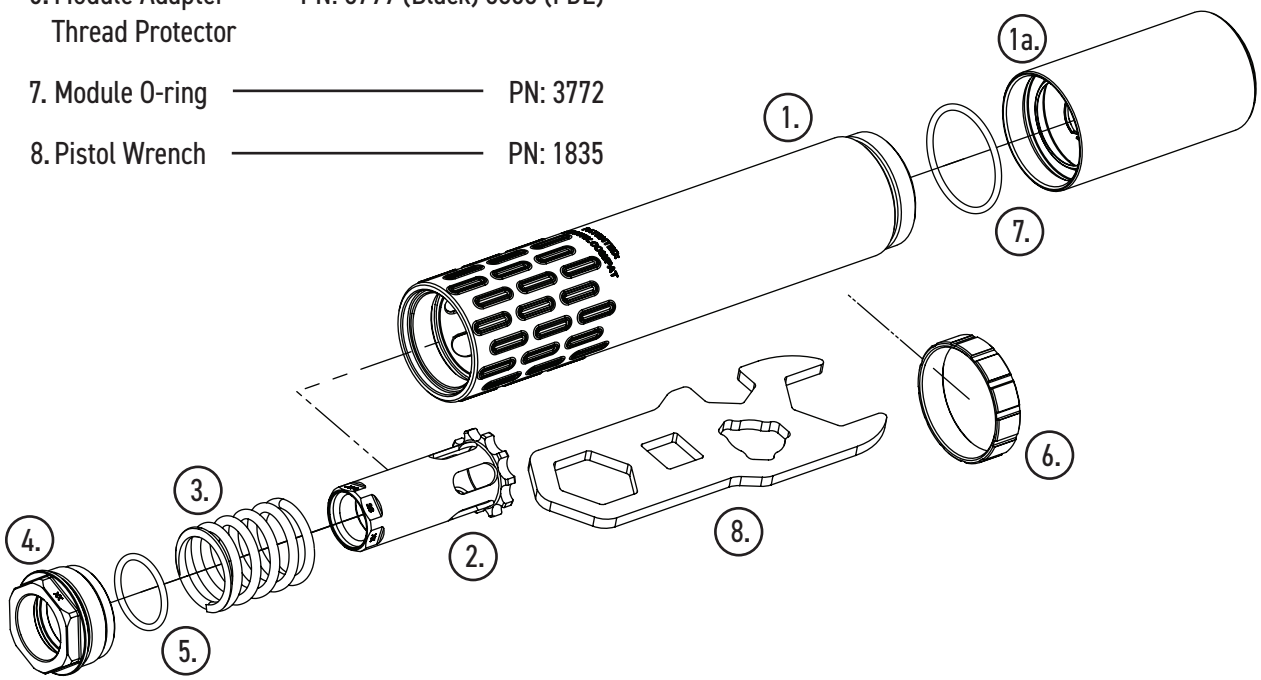

REPLACEMENT PARTS

Booster piston ——— PN: 1822

Booster spring ——— PN: 1794

Piston Adapter ——— PN: 1778

Piston O-ring kit ——— PN: 2584

Module Adapter —— PN: 3799 (Black) 3803 (FDE)
Thread Protector

Module O-ring kit ——— PN: 3805

SUPPORTED ACCESSORIES

STICTION

Pistol mini stiction lock adapter	PN: 2392
Mini stiction lock comp 9 1/2×28	PN: 2550
Mini stiction lock comp 9 M13.5×1 LH	PN: 2696
Mini stiction lock comp 45 5/8×24	PN: 2591
Mini stiction lock comp 45 .578×28	PN: 3766
Mini stiction lock assembly 45 5/8×24	PN: 3777
Mini stiction lock assembly 45 .578×28	PN: 3776

DIRECT THREAD

Direct thread adapter M13.5×1 LH	PN: 1982
Direct thread adapter 1/2×28	PN: 1984
Direct thread adapter 5/8×24	PN: 1985
Direct thread adapter 11/16×24	PN: 3750

3-LUG

3-lug adapter 45	PN: 2301
3-lug adapter 9mm	PN: 1858
3-lug piston 9mm	PN: 1855
3-lug piston 45	PN: 2300
3-lug muzzle device 9 M13.5×1 LH	PN: 2288
3-lug muzzle device 9 1/2×28	PN: 2346
3-lug muzzle device 45 5/8×24	PN: 2278
3-lug muzzle device 45 .578×28	PN: 2280
3-lug assembly 45 5/8×24	PN: 3779
3-lug assembly 45 .578×28	PN: 3778

OTHER PISTONS, XL PISTON

Piston 1/2×28	PN: 1792
Piston .578×28	PN: 1822
Piston M13.5×1 LH	PN: 1981
Piston 1/2×28 XL	PN: 3542
Piston 9/16×24	PN: 3736
Piston retaining kit	PN: 2588
Fixed barrel spacer	PN: 1836

HIGH-TEMP GREASE

CERAM-X™	PN: 9091

Apply Ceram-X™ to the piston, spring, and all contact points between the muzzle device and suppressor.

Ceram-X™ Grease offers superior lubrication and protection for a wide range of firearm applications where high temperatures are present. This high performance, non-toxic, metal-free grease is easy to use and improves corrosion resistance.

THREAD LOCKER

Use thread locker to ensure secure and proper muzzle device retention.

Rocksett Muzzle Adhesive – Refer to manufacturer guidelines for proper use when using this product.

SUPPRESSOR INSTALLATION & REMOVAL

SUPPRESSOR ASSEMBLY

The FLOW 45 M comes preassembled in its short configuration with a booster assembly and .578-28 Piston. Ensure the piston assembly is firmly torqued before firing.

To change the FLOW 45 M length configuration:

1. Unscrew the module adapter thread protector.
2. Ensure all threads are clean before assembly.
3. Thread the extension module onto the front of the suppressor body by hand until seated.
4. When converting back into the short configuration, unscrew the extension module and thread the module adapter thread protector onto the front of the suppressor body by hand until seated.

An adjustable wrench on the piston flats can be used as an opposing force to remove the extension module and piston base.

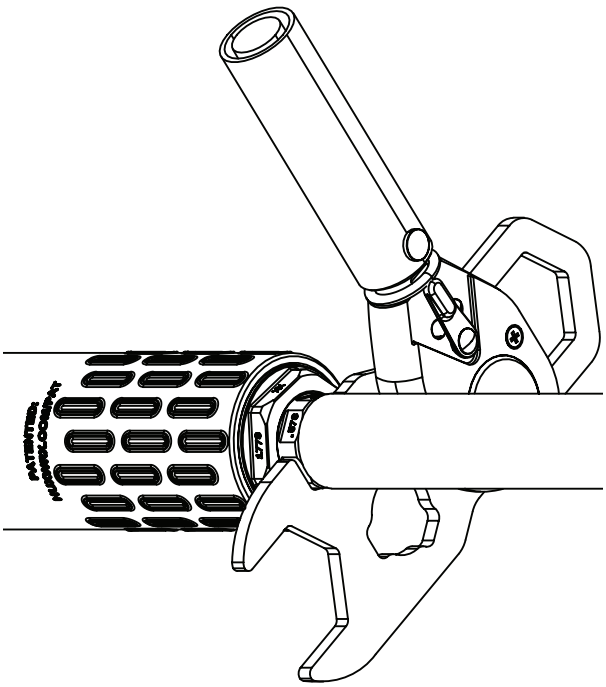

⚠ CAUTION

Suppressor may be hot after use.

Could result in moderate injury or serious burns.

Allow the suppressor to cool and wear protective gloves.

SUPPRESSOR INSTALLATION

⚠ WARNING

Firearm may be loaded.

Could result in death or serious injury.

Ensure the firearm is unloaded.

1. For handguns, lock the slide open to allow more room for the pistol Wrench with torque wrench attached.
2. Verify that the barrel and accessory thread pattern match.
3. Ensure all threads are clean before assembly.
4. Thread the suppressor onto the barrel until it bottoms out, either on the crown or shoulder of the barrel depending on the thread.
5. Tighten the piston or direct thread adapter to the barrel using the included pistol wrench, firmly by hand or using a ½" drive torque wrench to 15–25 ft-lb.

ACCESSORY INSTALLATION & REMOVAL

Ensure the firearm is unloaded and in a safe condition.

Inspect barrel and threads for debris and any signs of damage/defect.

1. The booster assembly comes preassembled and greased in the FLOW 45 M. The booster assembly with spring is necessary to function on weapon systems where the barrel reciprocates to cycle. Use Ceram-X or other high-temp grease on the piston, spring, and o-ring before use.
2. Ensure all threads are clean before assembly.
3. To disassemble the booster assembly from the housing, use the pistol wrench on the piston base flats along with an adjustable wrench on the piston flats if necessary.

To utilize any adapter system outside of the included piston assembly, remove the assembly, clean all threads, and install according to directions below:

3-Lug:

Ensure that the caliber of the 3-lug piston/adapter matches the caliber of the 3-lug muzzle device. Screw the 3-lug adapter into the base of the suppressor at 100–115 in-lb and screw the 3-lug muzzle device to the barrel of the firearm at 15–25 ft-lb.

Align the lugs of the muzzle device with the notches on the adapter and slide the suppressor onto the mount. Press the suppressor onto the muzzle device and twist until the lugs are seated.

Stiction:

Screw the stiction adapter into the base of the suppressor at 100–115 in-lb and screw the stiction comp to the barrel of the firearm at 15–25 ft-lb. Screw the suppressor onto the comp.

Direct Thread:

Screw the direct thread adapter into the base of the suppressor at 100–115 in-lb. Screw the suppressor onto the barrel of the firearm at 15–25 ft-lb.

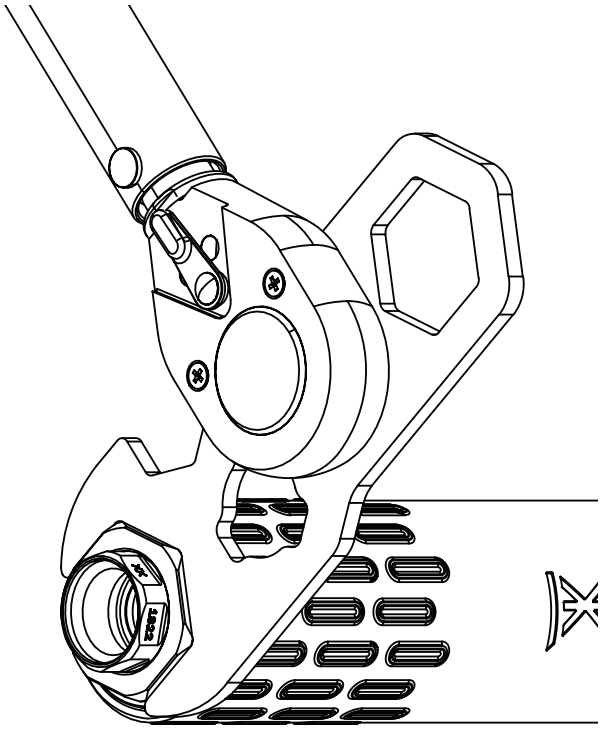

SUPPRESSOR ACCESSORY TORQUE CHART:

Piston adapter to suppressor	100–115 in-lb
Piston adapter to barrel	15–25 ft-lb
Direct thread adapter to suppressor	100–115 in-lb
Direct thread adapter to barrel	15–25 ft-lb
Mini stiction adapter to suppressor	100–115 in-lb
Stiction comp to barrel	25–35 ft-lb
3-lug adapter to suppressor	100–115 in-lb
3-lug muzzle device to barrel	25–35 ft-lb
Suppressor extension module	100–115 in-lb

⚠ WARNING

Suppressor may not be aligned to bore.

Could result in death, serious injury, or damage to the suppressor.

Utilize an alignment rod to ensure bore alignment with the suppressor.

RECOMMENDED CLEANING CYCLE

Clean the booster assembly after each session of shooting

1. Remove the booster assembly.
2. Apply CLP or similar cleaner.
3. Wipe all individual pieces with a lint-free rag, removing all debris and carbon.
4. Inspect o-ring for cracking or wear.
5. Apply Ceram-X or other high-temp grease to all faces.
6. Reassemble and torque to specifications.

After 1000-2000 rounds clean suppressor

Suppressor Sauce™ is the preferred cleaning solution for HUXWRX suppressors

Utilize proper PPE (i.e. Gloves, eye protection, and respiratory mask)

Clean in well-ventilated area

Please refer to your local guidelines for proper disposal procedures of used cleaning solutions.

⚠ WARNING

Potential lead exposure.

Could cause death or serious injury.

Wear protective gloves, eye protection, and respiratory protection. Ensure adequate ventilation. Wash hands thoroughly after exposure.